Installation Guide
FLAT COPING

TRUELINE

Pre-Installation
It is important that the area where the coping is to be installed is level and aligned correctly, as failure to do so will affect the joints lining up during installation.

Cutting
Being a bespoke system, coping sections will often need to be cut on site, to fit. A good quality jigsaw, fitted with suitable blades is recommended, however the use of angle grinders is not recommended. All cut edges should be de-burred and then repainted with touch-up paint (available from ARP).

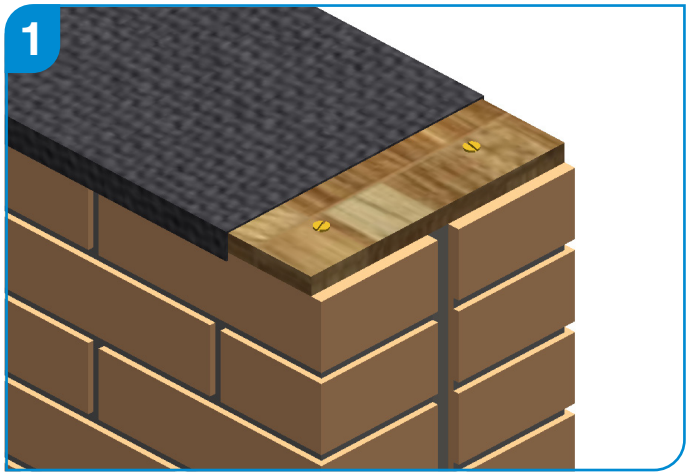

Before starting, it is important that there is a minimum of 18mm marine ply as well as a weatherproof membrane on top of the build.

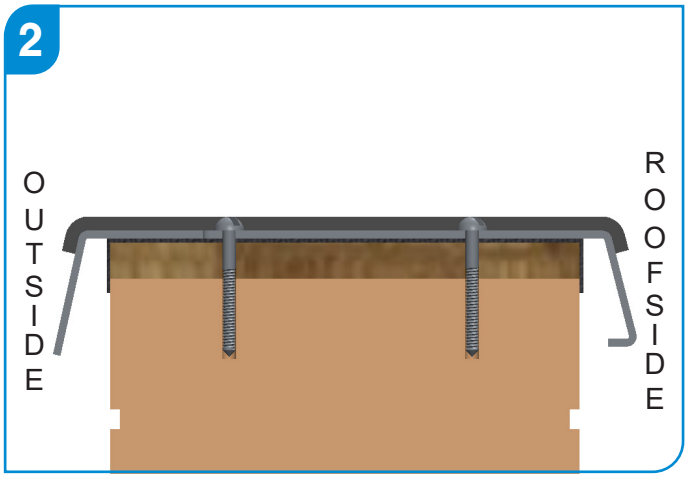

Whilst this guide is for flat coping, ARP recommends the use of sloping coping, which incorporates a standard 2° pitch, with the run-off directed towards the roof area.

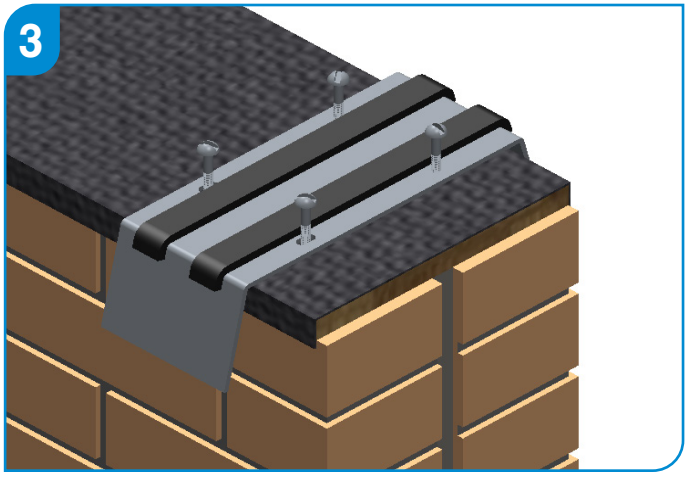

All coping components are supplied pre-drilled (for guidance only) and with EPDM sealing tape. The brackets should be secured to a depth of at least 50mm and should be suitable for the substrate. It is important that a secure fixing is made and consideration should be given where insulation has been installed on the outer face.

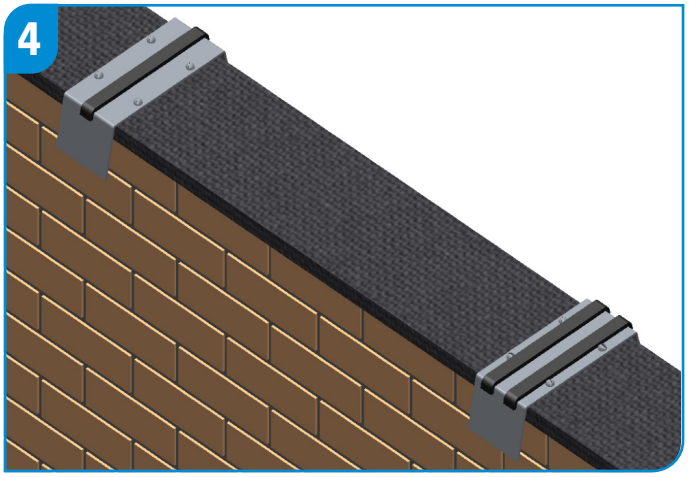

Jointing brackets will have 2 EPDM strips and fixing brackets have 1 strip. The fixing brackets should be spaced at a maximum of 1m apart and the jointing brackets directly under the 2 adjoining components. To ensure that there is correct alignment, it is recommended that the front edges of the brackets are level and in line.

5

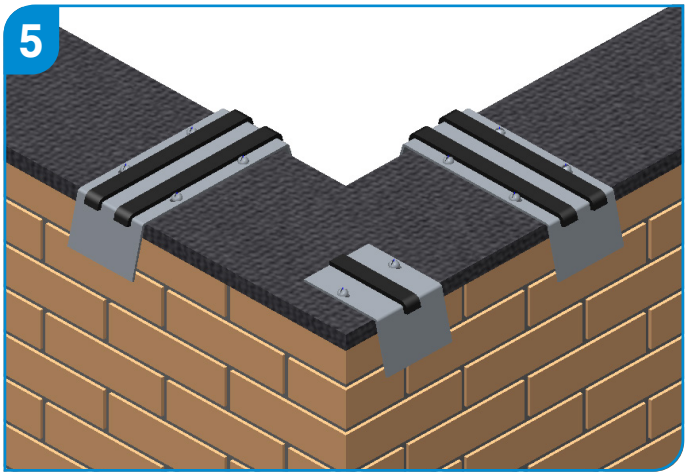

Any corners will need half brackets fixed as per above.

6

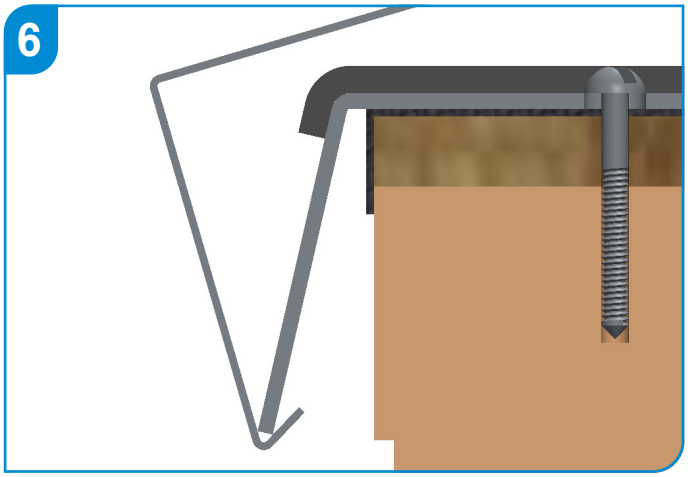

All coping and components are fitted by looping one edge over the external edge of the bracket and then pivoting the coping back the bracket towards the roofside.

7

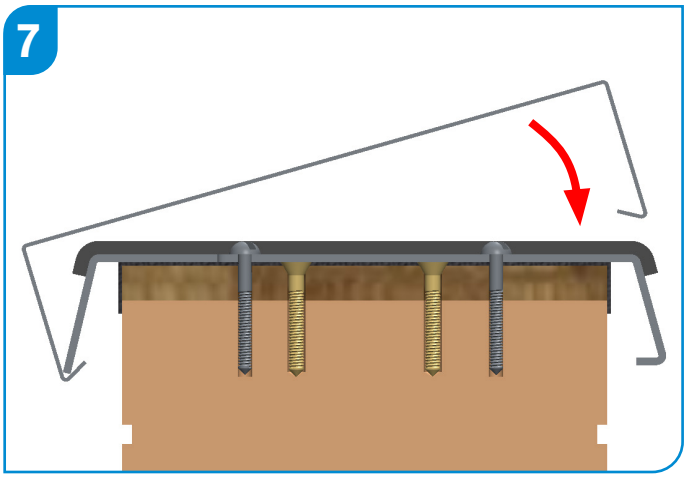

There will be some resistance as the coping compresses the EPDM strip, until the coping locates and clips over the internal edge.

8

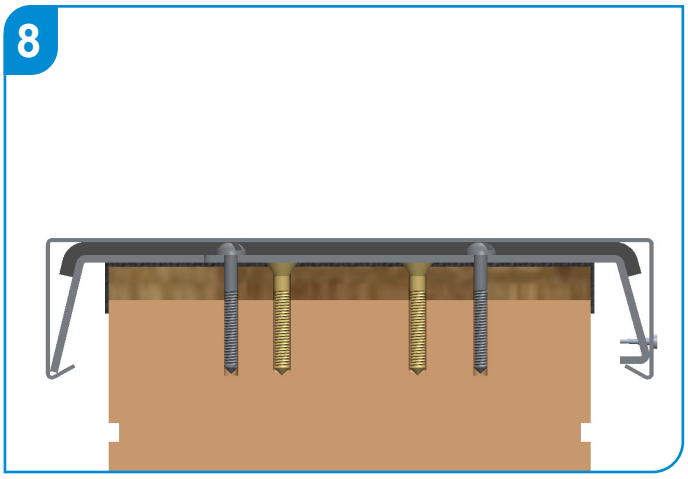

Ensure that the coping is secure and aligned on the front of the build. To further secure the coping, where it is at a high level or wider than 550mm, ARP recommends a secondary fixing with a self tap-ping screw be made on the internal edge through the coping into the fixing and jointing bracket.

9

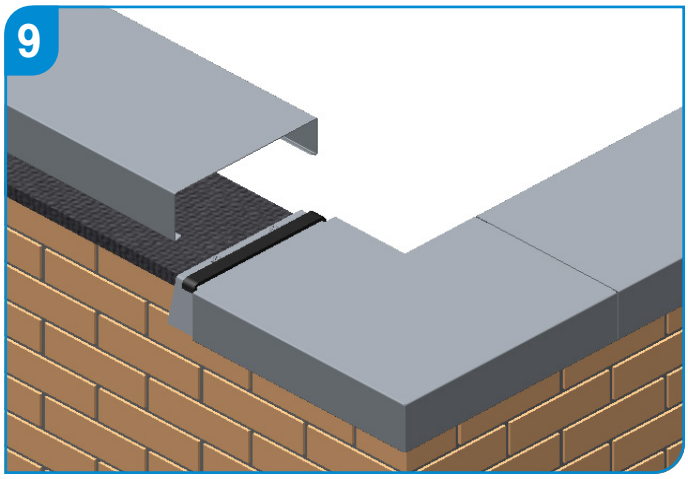

Installation should start at the corner, T-section or stopend/abutment and a line run along the front edge to ensure alignment. It is likely that at least one section of coping will need to be trimmed on site, so availability of the correct tools and touch-up paint is essential. To allow for thermal movement, it is recommended that 3-4mm is allowed as a gap between components.