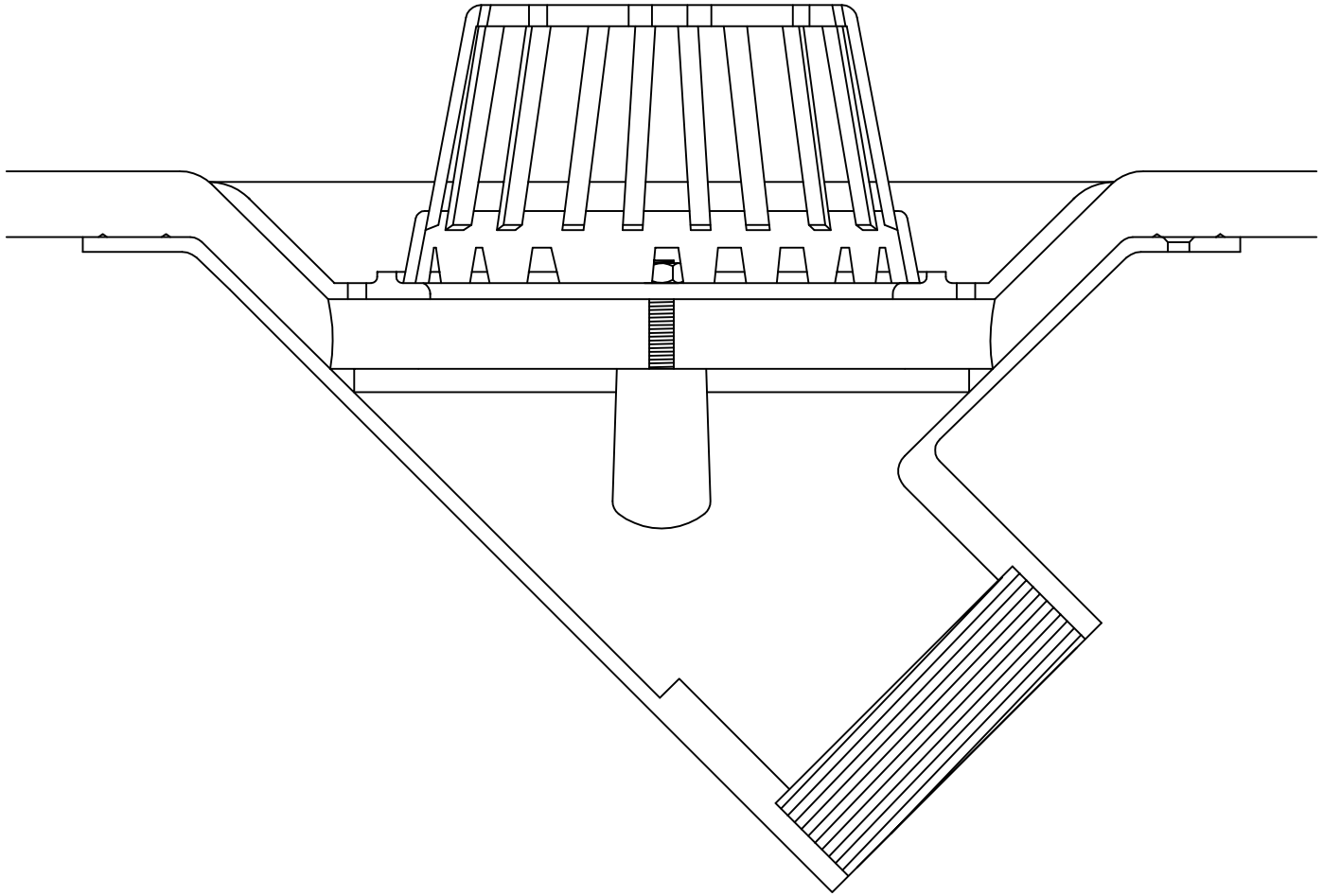

CAROFLOW LIMITED

Tel: +44(0)1763 244446

Code 100/45T